Tow-Trust Towbars

Important: Please read General Notes overleaf before fitting

Issue 1

TVV522HK VOLVO XC90 2003>

Item	Qty	Description	Item	Qty	Description
A	1	Crossmember	G	1	M12 x 25 Bolts & S/P Washers
B	2	Side Plates	H	6	M12 x 45 Bolts, 2 Nyloc Nuts & 4 S/P Washers
C	1	Detachable Housing	J	3	M12 x 22 Bolts & S/P Washers
D	1	Exhaust Spacer	K	6	12 x 25 Flat Washers
E	6	22m x 55m Spacer Bushes	L	6	M12 Nyloc Nuts
F	2	Clamp Plate Assembly			

1. Remove the spare wheel.
2. Remove covers and foam from each side of the boot floor.
3. Temporarily lower rearmost exhaust hanger.
4. Remove foam from inside face of chassis.
5. Remove tape from existing mounting points in each chassis.
6. Place Item **E** onto Item **F** and from inside the boot locate into the existing holes in each chassis member. Using Item **L** loosely attach Item **B** to these bolts.
7. Using Item **H** loosely bolt Item **A** to Item **B.**
8. Using Item **J** with Item **K** and Item **G** with Item **K** bolt Item **C** and **M** to Item **A**.
9. Using Item **H** with Item **K** and Item **D** used as a spacer, re-bolt the rearmost exhaust hanger back into place.
10. Fully tighten all nuts and bolts and ensure the Towbar is rigid and secure.
11. Replace spare wheel and covers.

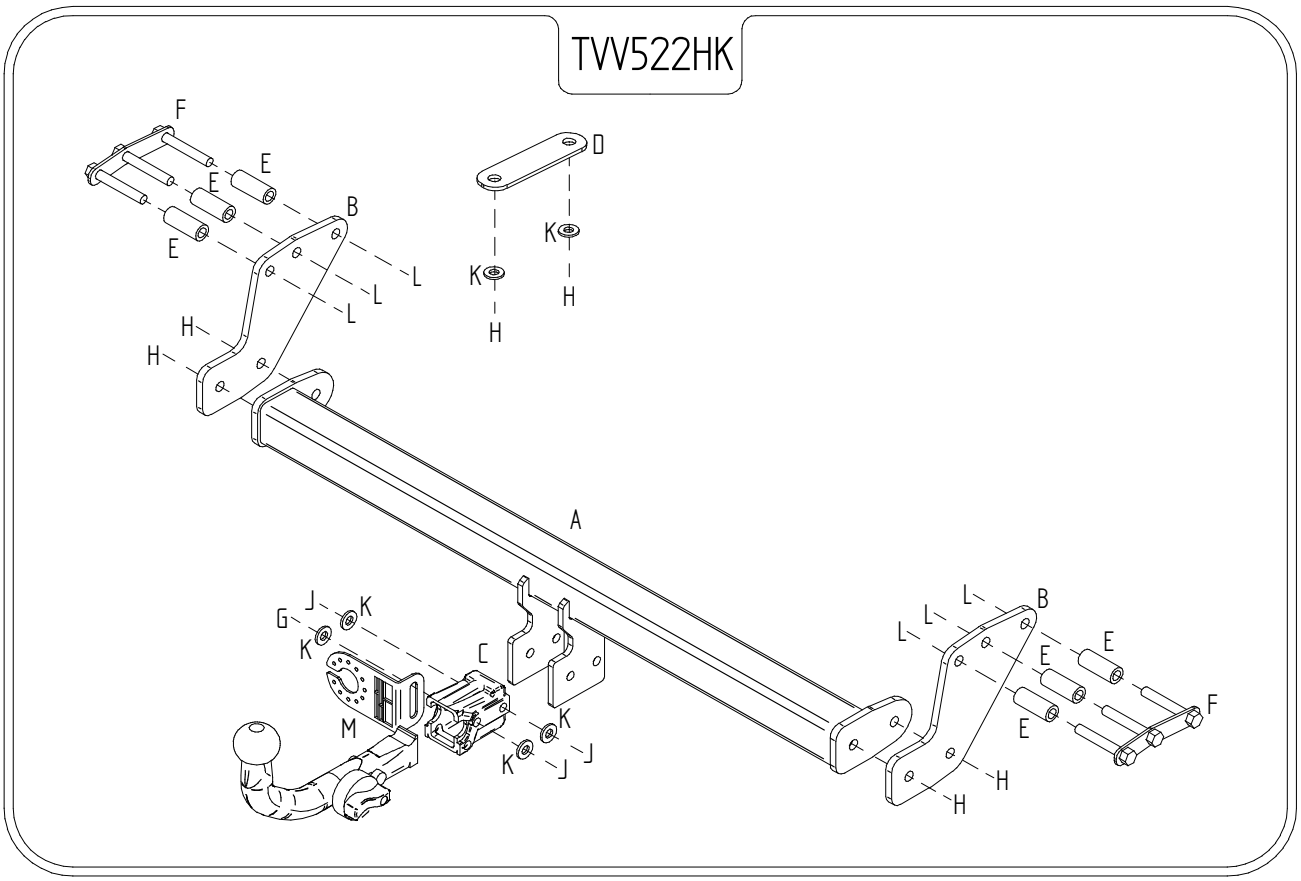

Note:

1. Recommended Torque Setting for M12 Grade 10.9 -139 Nm. (For other Torque Settings see notes overleaf.)
2. Nose load limits and vehicle manufacturer's trailer / caravan weight limits must be observed.